Dixon® Fire Submittal Sheet

Aluminum Hydrant Gate Valves

The Right Connection®

AHGV250F

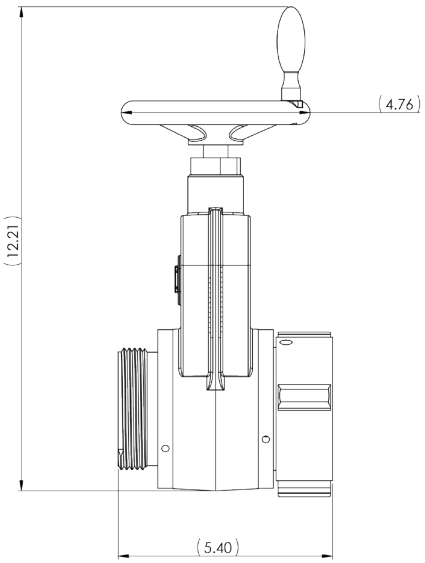

Female x Male Dimentions

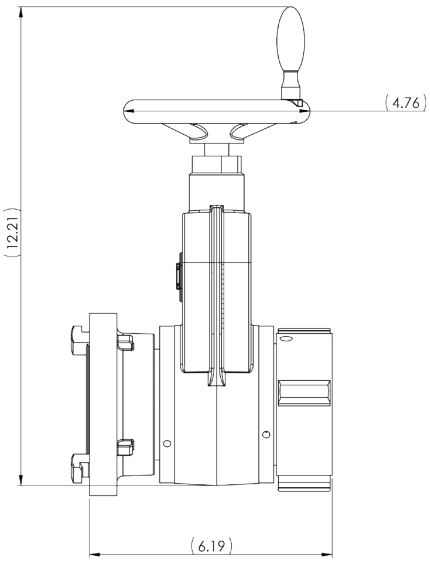

Female x Storz Dimentions

Specifications:

Female x Male

- ❑ Cast A356 aluminum valve; female inlet x male thread outlet; **250 PSI** Max

Storz x Male

- ❑ Cast A356 aluminum valve; 2-1/2" Storz inlet x male thread outlet; **250 PSI** Max

Female x Storz

- ❑ Cast A356 aluminum valve; female inlet x 2-1/2" Storz Outlet; **250 PSI** Max

Storz x Storz

- ❑ Cast A356 aluminum valve; 2-1/2" Storz inlet x 2-1/2" Storz Outlet; **250 PSI** Max

Inlet:

- ❑ NST
- ❑ NPSH
- ❑ CSA
- ❑ BAT
- ❑ QST
- ❑ NYFD
- ❑ NYC
- ❑ Storz
- ❑ Rigid NPT
- ❑ Other_____

Outlet:

- ❑ NST
- ❑ NPSH
- ❑ CSA
- ❑ BAT
- ❑ QST
- ❑ NYFD
- ❑ NYC
- ❑ Storz
- ❑ Rigid NPT
- ❑ Other_____

Optional Caps:

- ❑ Storz Cap
- ❑ Rocker Lug Cap

Replacement Parts:

- ❑ Handwheel
- ❑ Handwheel nut
- ❑ Valve Rebuild Kit

NOTE: Other configurations and finishes are also available. Consult Dixon for more information.

Dixon Fire

325 Arbor Ct
Winchester, VA 22602
ph: 877.712.6179
fx: 800.283.4966
dixonvalve.com

© 2023 DVCC • AHGVFDC_723